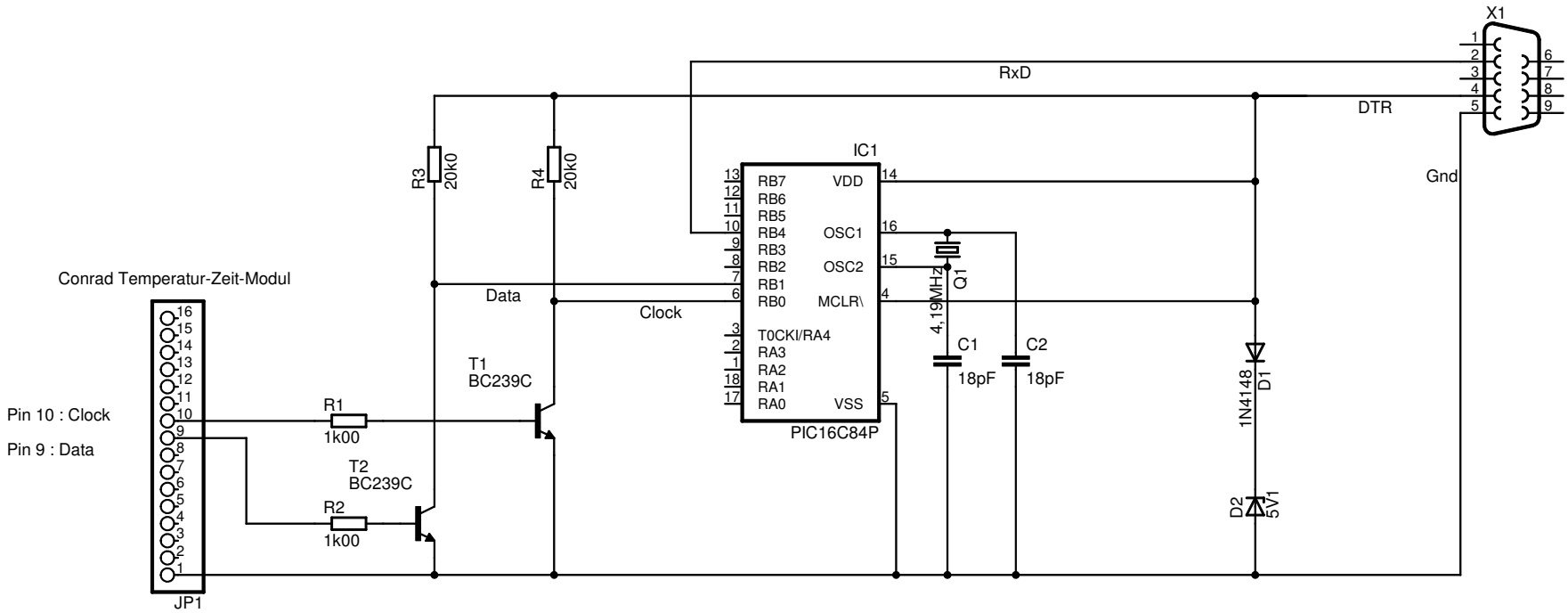

TITLE: µTelCon	
Document Number:	REV: 1.0
Date: 21.02.2006 20:17:58	Sheet: 1/1